SAFRAN Colibrys

DESIGNED FOR ACCURACY, BUILT FOR TRUST

ColibrysACCELERATION
Inclinometer

TS8002 – DATASHEET

Single axis analog inclinometer

The TS8002 is a single axis cost effective +/- 2g MEMS capacitive Accelerometer / Inclinometer based on a bulk micro-machined silicon element specifically designed for good performances tilt measurement in rugged environment. With a proven reliable and hermetic sealed package, TS8002 will cover large range of industrial tilt application.
Based on 25 years in high performance MEMS sensors, Colibrys Sensors remain the reference in term of long term stability.

Functional Block Diagram

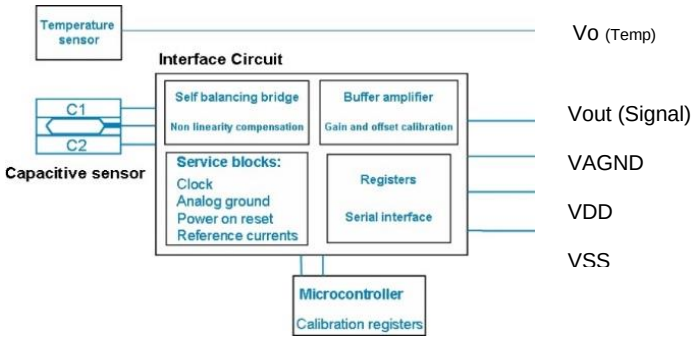

Key features

- Range +/-2 g
- Excellent long term bias stability (less than 0.09°)
- Low temperature sensitivity (bias less than 0.012°/°C)
- Hermetic seal: no bias drift in severe environment
- Low consumption, less than 2mW
- Low Noise < 0.001°/√Hz
- Small 48 pin LCC ceramic package (14.2mm x 14.2mm)
- Wide temperature range -40 to 125°C

Featured Applications (non-exhaustive)

Industrial
Agricultural GPS dead reckoning, position system
Antenna leveling
Construction machine inclination

Energy
3D Borehole survey
Tilt orientation within pipeline (logging – Wireline) LWD

Railway
Train tilt measurement
Dynamic Railway tracks geometry system

Military
Low end GPS dead reckoning system and tracking
Low-end North finding,
Sonar Arrays Antenna

Specifications

TS8002 Parameters

All values are specified at ambient temperature (20°C) and at 5 V supply voltage VDD, unless otherwise stated.

Parameter	Comments	Min	Typ.	Max	Unit
Accelerometer					
Full Dynamic Scale range		-2		+2	g
Measurement range for Angle ϕ [4]	Up to +/-90°	-90		+90	°
Non-linearity [5]	% of Full Scale		0.5	1.0	%
Frequency response [3]	±3dB	200			Hz
Noise	in band (0 ; 9KHZ)		0.001		°/√Hz
Resonant frequency			1.4		KHz
Resolution	@ 1Hz	0.0057			°
Bias (K0)					
Nominal	Calibration	-0.573		+0.573	°
Temperature coefficient [2]	Measured between [-40°C to 20°C]		0.012	0.03	°/°C
Long-term stability [1]	One Year		0.086		°
Scale factor (K1)					
Nominal [4]	**Angle ϕ** Calibration,		17.5		mV/°
Nominal	g Calibration	992	1000	1008	mV/g
Temperature coefficient [2]	Measured between [-40°C to 20°C]	-50	100	250	ppm/°C
Long-term stability[1]	One Year		300	1000	ppm
Axis misalignment					
Nominal		-10		10	mrad
Temperature sensor					
Output voltage @20°C			1.632		V
Sensitivity			-11.77		mV/°C
Long term stability	(1000h @ 150°C)	-0.03		0.09	°C
Accuracy	(From -40°C to 125°C)	-5		+5	°C
Recovery time					
Shock recovery time	(1000g, half-sine period 1ms, shocks in direction i)			1	ms
Power requirements					
Supply voltage (V_{DD}-Vss)	The standard voltage for calibration is 5.0 VDC.	2.5		5.5	V
Supply current	@ 5.0 VDC			400	µA
Initialization & reset current consumption	@ 5.0 VDC during the initialization phase (less than 35 ms at room temperature)		1500		µA

Table 1: TS8002 specifications

TS8002 Parameters

All values are specified at ambient temperature (20°C) and at 5 V supply voltage V_{DD}, unless otherwise stated.

Accelerometer outputs				
Output voltages	@ 5.0 VDC input voltage (VDD/2 at 0g)	0.5	4.5	V
Output load	at Vout (pin 32)		50	pF
Output load	at VAGND (pin 38)		100	µF
Output impedance	at Vout (pin 32) and VAGND (pin 38)	50		kΩ

[1] One year stability defined according to IEEE 528: turn on / off, unpowered storage at -55°C and 85°C, unpowered -40°C to 125°C T cycling, -55°C to 85°C unpowered harass, vibration, shock (1000g, single shock).
[2] Temperature coefficients are specified for a range of –40°C to 20°C, where temperature behaviour is typically linear and coefficient are maximum.
[3] The bandwidth is defined as the frequency band for which the sensitivity has decreased by less than 3dB.
[4] The relationship between the acceleration output (g) and the angle ϕ is sinusoidal. For small angles (+/-5°), this relationship may be simplified as follow: ϕ [°] ~ gamma [g]* 180/ pi. This conversion formula is used a reference all along the datasheet, unless otherwise stated
[5] Non Linearity is measured in g (acceleration)

Table 2: TS8002 specifications

Absolute maximum ratings

Absolute maximum ratings are stress ratings. Stresses in excess of these ratings can cause permanent damage to the device. Exposure of the device to the absolute maximum ratings for an extended period may degrade the device and affect its reliability.

Parameter	Comments	Min	Typ	Max	Unit
Supply voltage (V_{DD})	Standard voltage for calibration is 5 VDC	-2.5		5.5	V
Operational temperature		-40		125	°C
Storage temperature		-55		125	°C
Vibration	(random noise, 30 minutes in each direction o, p, i)			20	grms
Shock Survivability	(0.15ms half-sine, single shock, not repetitive, in one direction o, p or i)			6‘000	g
ESD stress	Class 2 (requirements MIL-STD-883-G, 1 Method 3015.7), Human Body Model	-2		2	kV
Reset	The sensor is Brown out protected. A reset occurs when the power supply jumps more than -0.46 V with a slope >380V/s or if the power supply drops below 2.2V. The recovery time is typ. 25 ms (max 35 ms)				

Table 3: Absolute maximum ratings

Pinout Description and recommended proximity circuit

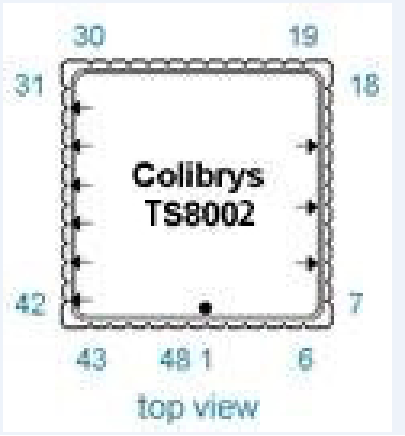

Pin	TS8002 Description	**Notes**
9	VPP (Colibrys internal calibration pin)	**Must be connected to VSS**
12	SCK (Colibrys internal calibration pin)	**Must be connected to VSS**
15	SDA (Colibrys internal calibration pin)	**Must be connected to VSS**
32	Vout (Signal)	**Accelerometer output signal**
36	VSS	**Ground**
38	VAGND	**Accelerometer output reference voltage (VDD / 2)**
40	VDD	**Power supply**
42	Vo (temp)	**Temperature sensor output**

Table 4: TS8002 pinout description

Figure 1: Pinout top view

The device pin layout is given in Figure 2 and a description of each pin given in the Table 5:. The capacitors C1 (1 µF), C2 (1 µF) and C3 (1 µF) are shown in Figure 3: and must be placed as close as possible to the TS8002 package and are used as decoupling capacitors and for a proper sensor startup.

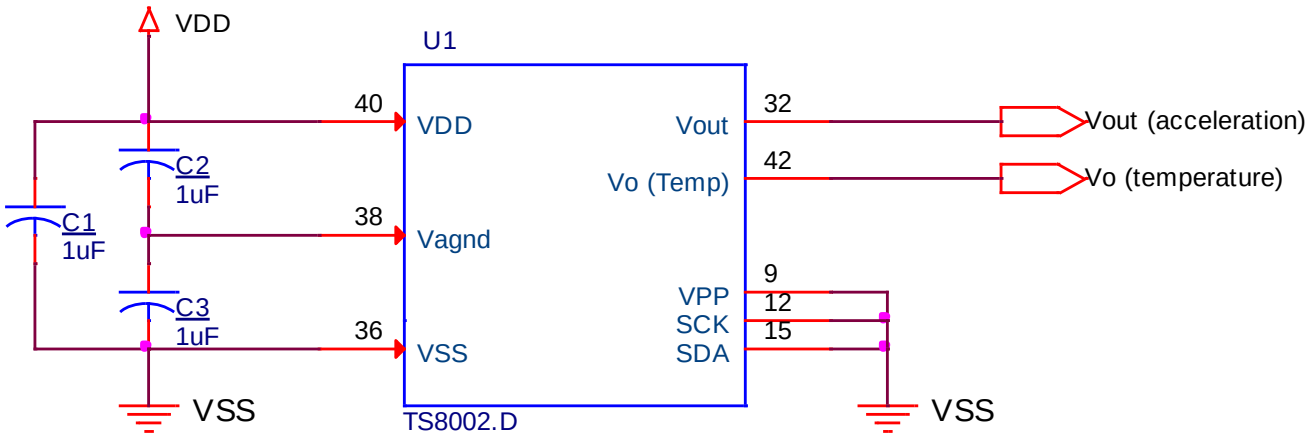

Figure 4: Proximity circuit

Dimensions and package specifications

The packaging is a standard LCC ceramic housing with a total of 48 pins. The precise dimensions are given in the next figure and the weight of the final product is typically smaller than 1.64 grams

The sealing process is qualified according to the MIL-STD-883-G and systematical leak tests are performed up to $5 \cdot 10^{-8}$ atm·cm^3/s.

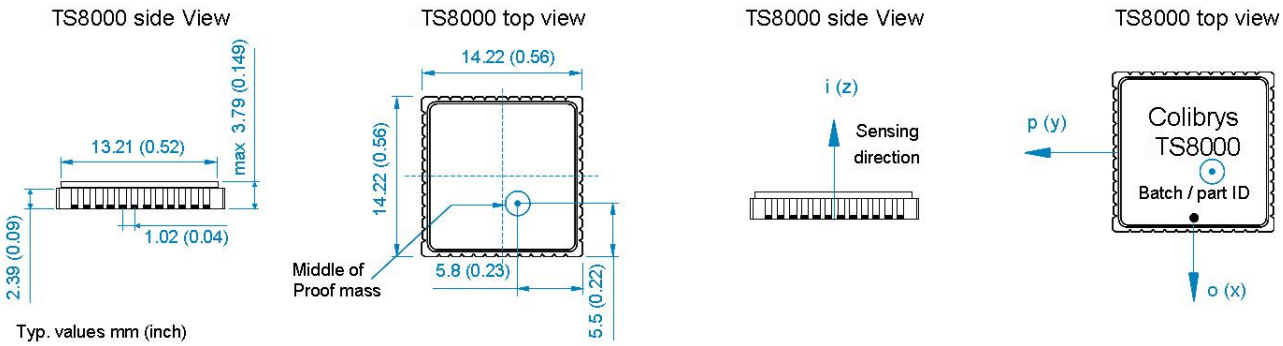

Figure 5: Package mechanical dimension

Parameters	TS8002
Packaging	Non magnetic, LCC, 48 pin housing
Lead finishing	Au plating: 0.5 to 1.5 µm Ni plating: 1.27 to 8.89 µm (typ. 3 to 5 µm) W (tungsten): 10 to 15 µm
Hermeticity	The product has been qualified according to MIL-STD-833-G. Hermetic sealing is systematically qualified at $5 \cdot 10^{-8}$ atm·cm^3/s
Weight	< 1.64 grams
Size	Typ. 14.2 x 14.2 x 3.3 mm (0.56 x 0.56 x 0.13 inch) Max. 14.48 x 14.48 x 3.79 mm (0.57 x 0.57 x 0.149 inch)
Proximity effect	The sensor is sensitive to external parasitic capacitance. Moving metallic objects with large mass or parasitic effect at proximity of the accelerometer (mm range) must be avoided to insure best product performances.
Reference plane for axis alignment	LCC must be tightly fixed to the PCB, using the bottom of the housing as reference plane for axis alignment. Using the lid as reference plane or for assembly may affect specifications and product reliability (i.e. axis alignment and/or lid soldering integrity)

Table 6: Package specifications

Ratiometric output recommendation and operation

The standard calibration voltage for the TS8002 is (VDD-VSS) = 5V. Therefore, all specifications are valid for this supply voltage unless otherwise stated. Upon market request, the calibration of the product at a different voltage (between 2.5V and 5.5V) is possible.
In such a case, the nominal output signal will vary according to the following equation:

Vout = (VDD - VSS) / 2 + Ai * (K1 * VDD / 5) (1)
VAGND = (VDD – VSS) / 2 (2)

According to this equation (1), the bias and scale factor are ratiometric to the power supply voltage.
A reference voltage VAGND is also provided at half of the power supply and corresponds to the output voltage at zero g. All sensors are calibrated to match the ideal response curve in term of offset, gain and non-linearity.

At every power-up, the microcontroller, used as memory, transfers the calibration parameters to the ASIC and then goes in a sleep mode. During this initialization phase, which takes less than 50ms, the current consumption goes up to max. 1,5mA @ 5V and at room temperature. Then, the normal operating current is set and remains less than 400µA under similar conditions.

It is important to note the potential presence of spikes on the output signal. These spikes are coming from the internal switched capacitors of the balancing loop electronic stage. The frequency of these spikes is about 4 kHz and higher. It is strongly recommended to add a low pass filter on Vout output, with a cutting frequency of 200Hz to remove these spikes.

The power supply VDD is between 2.5 to 5.5 V. As our sensor is ratiometric, it is recommended to have a very stable power supply with very small output temperature coefficient. To achieve noise specification, the power supply noise level must be as low as possible (<1uV/srt(Hz)). Recommended regulator for power supply are ADR45xx family

Temperature compensation

The TS8002 delivers an output acceleration signal without any internal temperature compensation. The intrinsic temperature coefficient is quite small but can be further improved through a compensation by using the temperature provided by the internal temperature sensor. Third order compensation equation is generally required for a coherent modeling of a TS8002.

Using TS8002 for Tilt Application

The accelerometer is using the effect of terrestrial gravity (1g) on the seismic mass as input acceleration to determine the inclination (Fig 7:). The inertial mass is the center wafer, supporting the proof mass through the spring. The accelerometer output signal "Vout" is a ratiometric analog voltage following the next equation:

Vout = Bias + (Scale factor x Acceleration)

where:

- The Bias [V] is the output voltage at 0g acceleration
- The Scale factor [V/g] is the sensor sensitivity
- The Acceleration [g] is the earth acceleration (1g) applied through the sensitive axis

The angle ϕ is calculated using the following equation:

Angle ϕ = arcsin ((Vout – Bias) / (1g x Scale_factor))

where ϕ is in degrees.

Variable capacitance accelerometer used as Inclinometer

The accelerometer rotated through the gravity acceleration produces a sinusoidal output signal. The figure 7 shows a schematic example of the accelerometer under various earth acceleration.

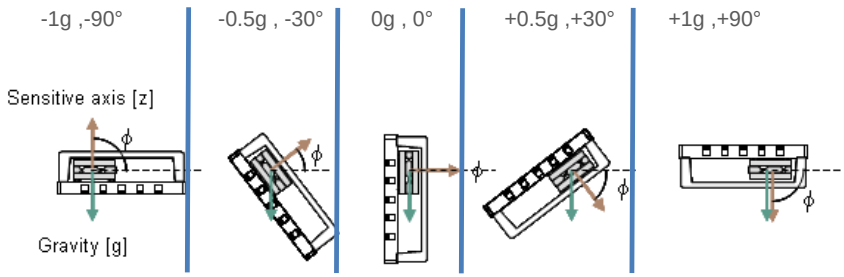

Fig 6:: Accelerometer at various angles

Handling precautions

The TS8002 is packaged in a hermetic ceramic housing to protect the sensor from the ambient environment. However, poor handling of the product can induce damage to the hermetic seal or to the ceramic package made of brittle material (alumina). It can also induce internal damage to the MEMS accelerometer that may not be visible and cause electrical failure or reliability issues. Handle the component with caution: shocks, such as dropping the accelerometer on hard surface, may damage the product.

The component is susceptible to damage due to electrostatic discharge (ESD). Therefore, suitable precautions shall be employed during all phases of manufacturing, testing, packaging, shipment and handling. Accelerometer will be supplied in antistatic bag with ESD warning label and they should be left in this packaging until use. The following guidelines are recommended:

- Always manipulate the devices in an ESD-controlled environment
- Always store the devices in a shielded environment that protects against ESD damage (at minimum an ESD-safe tray and an antistatic bag)
- Always wear a wrist strap when handling the devices and use ESD-safe gloves

This product can be damaged by electrostatic discharge (ESD). Handle with appropriate precautions.

SMD recommendation

The TS8002 is RoHS compliant suitable for lead free soldering process and SMD mounting. It must be tightly fixed to the PCB, using the bottom of the housing as reference plane to ensure a good axis alignment.
The stress induced by the soldering of the LCC package is a specific MEMS concern, especially when it comes to high-end capacitive sensors. In order to obtain good stress homogeneity and the best long term stability, all the leads of the accelerometer must be soldered to the pads of the PCB. See the Colibrys Technical Note "- LCC Mounting and Soldering Conditions" available on our web site for more information about the LCC mounting process in general.

The TS8002 is suitable for Sn/Pb and Pb-Free soldering. Typical temperature profiles recommended by the solder manufacturer can be used with a maximum ramp-up of 3°C/second and a maximum ramp-down of 6°C/second: The exact profile depends on the used solder paste.

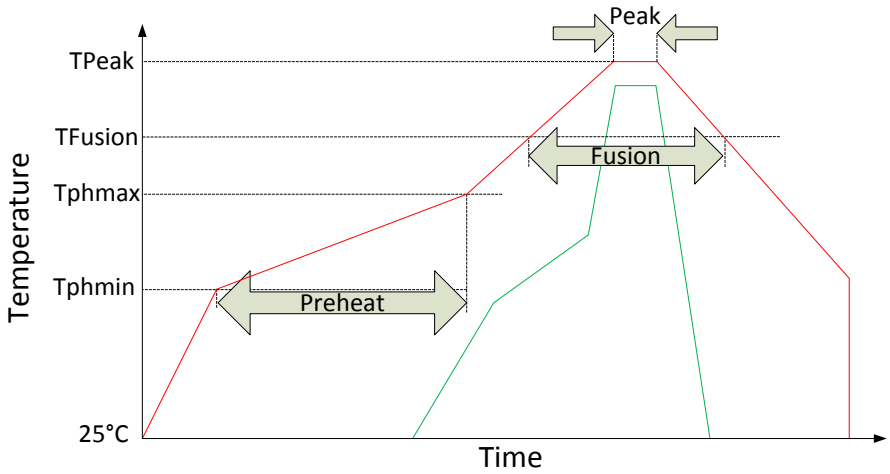

Figure 7: Soldering Temperature Profile

Phase	Sn/Pb		Pb-Free	
	Duration [sec]	Temperature [°C]	Duration [sec]	Temperature [°C]
Peak	10-30	235-240	20-40	245-250
Fusion	60-150	183	60-150	217
Preheat	60-120	Min : 100 Max : 150	60-180	Min : 150 Max : 200

Table 7: Soldering temperatures & times

Note: Ultrasonic cleaning must be avoided in order to avoid damage to the MEMS accelerometer

Glossary of parameters of the Data Sheet

g[m/s²]

Unit of acceleration, equal to standard value of the earth gravity (Accelerometer specifications and data supplied by Colibrys use 9.80665 m/s²)

Bias [mg or °]

The accelerometer output at zero g or °

Bias stability [mg or °]

Maximum drift of the bias after extreme variation of external conditions (aging, temperature cycles, shock, vibration)

Bias temperature coefficient [µg/°C or °/C]

Maximum variation of the bias calibration under variable external temperature conditions (slope of the best fit straight line through the curve of bias vs. temperature). Bias Temperature Coefficient is specified between –40°C and +20°C, where temperature behaviour is linear

Scale factor sensitivity [mV/g]

The ratio of the change in output (in volts) to a unit change of the input (in units of acceleration); thus given in mV/g

Scale factor temperature coefficient [ppm/°C]

Maximum deviation of the scale factor under variable external temperature conditions

Temperature sensitivity

Sensitivity of a given performance characteristic (typically scale factor, bias, or axis misalignment) to operating temperature, specified as worst case value over the full operating temperature range. Expressed as the change of the characteristic per degree of temperature change; a signed quantity, typically in ppm/°C for scale factor and g/°C or °/°C for bias. This figure is useful for predicting maximum scale factor error with temperature, as a variable when modelling is not accomplished

Axis alignment [mrad]

The extent to which the accelerometer's true sensitive axis deviates from being perfectly orthogonal to the accelerometer's reference mounting surface when mounted to a flat surface

Resolution, Threshold [mg]

Value of the smallest acceleration that can be significantly measured

Non-linearity [% of FS]

Non linearity : over the full acceleration range, measured under vibrations. Deviation is expressed as the maximum deviation of accelerometer output from the best linear fit over the full operating range. The deviation is expressed as a percentage of the full-scale output ($+A_{FS}$).

Bandwidth [Hz]

Frequency range from DC to F-3dB where the variation of the frequency response is less than –3dB

Resonant frequency nominal [kHz]

Typical value of the resonant frequency of the mounted system

Noise [µV/√Hz or µg/√Hz or °/√Hz]

Undesired perturbations in the accelerometer output signal, which are generally uncorrelated with desired or anticipated input accelerations

Colibrys reserves the right to change these data without notice

Quality

Colibrys is ISO 9001:2008, ISO 14001:2004 and OHSAS 18001:2007 certified

Colibrys is in compliant with the European Community Regulation on chemicals and their safe use (EC 1907/2006) REACH.

TS8002 products comply with the EU-RoHS directive 2011/65/EC (Restrictions on hazardous substances) regulations

Recycling : please use appropriate recycling process for electrical and electronic components (DEEE)

TS8002 products are compliant with the Swiss LSPro : 930.11 dedicated to the security of products

Note:

- *TS8002 accelerometers are available for sales to professional only*
- *Les accéléromètres TS8002 ne sont disponibles à la vente que pour des clients professionnels*
- *Die Produkte der Serie TS8002 sind nur im Vertrieb für kommerzielle Kunden verfügbar*
- *Gli accelerometri TS8002 sono disponibili alla vendita soltanto per clienti professionisti*

Colibrys complies with due diligence requirements of Section 1502, Conflict Minerals, of the US Dodd-Frank Wall Street Reform and Consumer Protection Act and follows latest standard EICC/GeSI templates for Conflict Material declaration